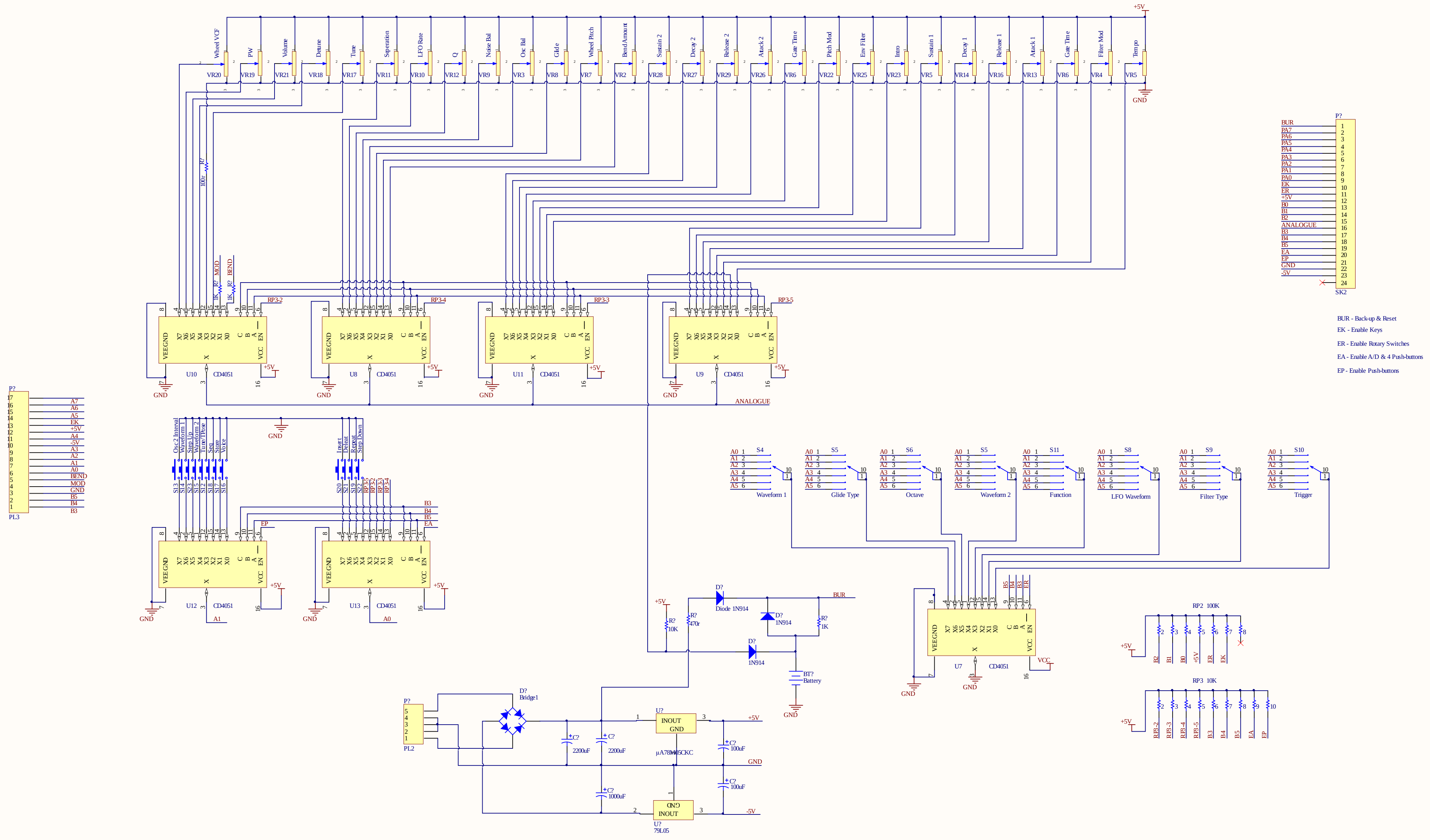

+5V
GND
Wheel VCF
PW
Volume
Detune
Tune
Seperation
LFO Rate
Q
Noise Bal
Osc Bal
Glide
Wheel Pitch
Bend Amount
Sustain 2
Decay 2
Release 2
Attack 2
Gate Time
Pitch Mod
Env Filter
Intro
Sustain 1
Decay 1
Release 1
Attack 1
Gate Time
Filter Mod
Tempo
VR20 VR19 VR21 VR18 VR17 VR11 VR10 VR12 VR9 VR3 VR8 VR7 VR2 VR28 VR27 VR29 VR26 VR6 VR22 VR25 VR23 VR5 VR14 VR16 VR13 VR6 VR4 VR5
R? 100r
MOD
BEND
R? 1K
RP3-2
RP3-4
RP3-3
RP3-5
U10 CD4051
U8 CD4051
U11 CD4051
U9 CD4051
ANALOGUE
VEE GND X7 X6 X5 X4 X3 X2 X1 X0 C B A EN X VCC
P?
BUR
PA7
PA6
PA5
PA4
PA3
PA2
PA1
PA0
EK
ER
+5V
B0
B1
B2
ANALOGUE
B3
B4
B5
EA
EP
GND
-5V
SK2
P?
A7
A6
A5
EK
+5V
A4
-5V
A3
A2
A1
A0
BEND
MOD
GND
B5
B4
B3
PL3
Osc 2 Interval
Waveform 1
Step Up
Waveform 2
Tune/Thru
Seq
Store
Voice
S13 S14 S23 S15 S12 S18 S17 S16
Insert
Delete
Repeat
Step Down
S20 S21 S19 S22
RP3-6 RP3-7 RP3-8 RP3-9
EP
EA
U12 CD4051
U13 CD4051
A1
A0
A0 A1 A2 A3 A4 A5
S4 Waveform 1
S5 Glide Type
S6 Octave
S5 Waveform 2
S11 Function
S8 LFO Waveform
S9 Filter Type
S10 Trigger
B5 B4 B3 ER
U7 CD4051
VCC
RP2 100K
B2 B1 B0 +5V ER EK
RP3 10K
RP3-2 RP3-3 RP3-4 RP3-5 B3 B4 B5 EA EP
D? Diode 1N914
D? 1N914
BUR
R? 10K
R? 470r
R? 1K
BT? Battery
P?
PL2
D? Bridge1
C? 2200uF
C? 2200uF
U? µA7805CKC
IN OUT GND
C? 100uF
C? 1000uF
C? 100uF
U? 79L05
-5V

BUR - Back-up & Reset

EK - Enable Keys

ER - Enable Rotary Switches

EA - Enable A/D & 4 Push-buttons

EP - Enable Push-buttons

Title
OSCAR - CONTROL BOARD

Size A2
Number 1
Revision
Date: 7/1/2017
Sheet 1 of 1
File: C:\Users\..\Control Board.SchDoc
Drawn By: L.Walker - SSM

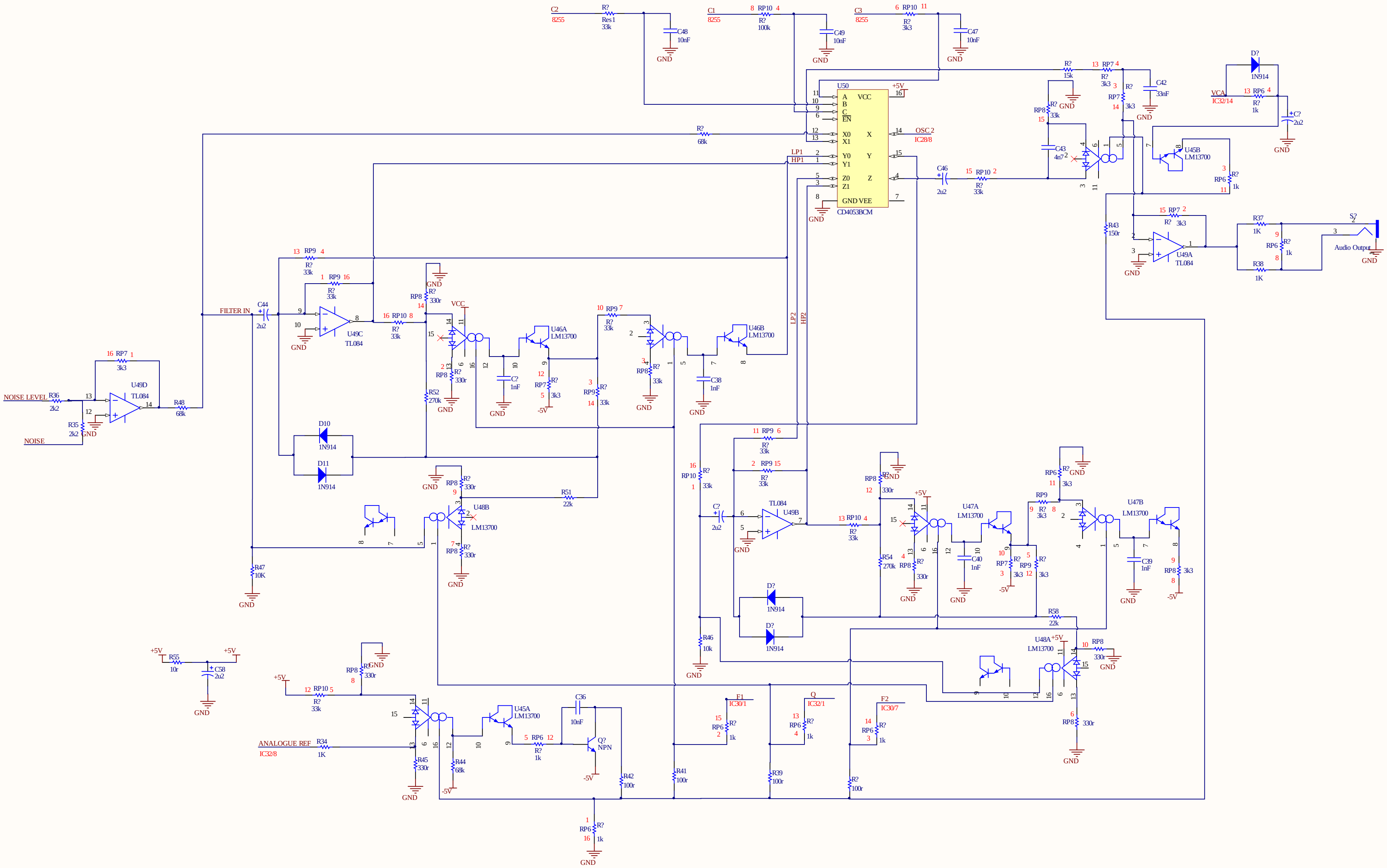
C2
8255
R?
Res1
33k
C48
10nF
GND
C1
8255
8 RP10 4
R?
100k
C49
10nF
C3
8255
6 RP10 11
R?
3k3
C47
10nF
U50
+5V
A
B
C
EN
VCC
X0
X1
X
Y0
Y1
Y
Z0
Z1
Z
GND VEE
CD4053BCM
OSC 2
IC28/8
LP1
HP1
LP2
HP2
R?
68k
C46
2u2
15 RP10 2
R?
33k
R?
15k
13 RP7 4
R?
3k3
C42
33nF
RP8
15
C43
4n7
RP7
14
VCA
IC32/14
13 RP6 4
R?
1k
D?
1N914
C?
2u2
U45B
LM13700
3
RP6
11
1k
R43
150r
15 RP7 2
R?
3k3
U49A
TL084
R37
1K
RP6
1k
R38
1K
S?
Audio Output
13 RP9 4
R?
33k
1 RP9 16
FILTER IN
C44
2u2
U49C
TL084
16 RP10 8
RP8
330r
14
VCC
U46A
LM13700
R52
270k
C?
1nF
RP7
3k3
-5V
10 RP9 7
R?
33k
RP9
33k
U46B
LM13700
C38
1nF
16 RP7 1
R?
3k3
U49D
TL084
NOISE LEVEL
R36
2k2
R35
2k2
R48
68k
NOISE
D10
1N914
D11
1N914
U48B
LM13700
R51
22k
R47
10K
11 RP9 6
R?
33k
2 RP9 15
RP10
R?
33k
C?
2u2
TL084
U49B
13 RP10 4
R?
33k
+5V
U47A
LM13700
R54
270k
C40
1nF
RP9
R?
3k3
U47B
LM13700
C39
1nF
RP8
3k3
D?
1N914
R58
22k
R46
10k
U48A
LM13700
RP8
330r
+5V
R55
10r
C58
2u2
12 RP10 5
R?
33k
ANALOGUE REF
IC32/8
R34
1K
R45
330r
R44
68k
U45A
LM13700
5 RP6 12
C36
10nF
Q?
NPN
R42
100r
R41
100r
F1
IC30/1
15
RP6
2
Q
IC32/1
13
RP6
4
R39
100r
F2
IC30/7
14
RP6
3
R?
100r
1
RP6
16
1k

Title	OSCAR - VCF VCA	
Size A2	Number 1	Revision
Date: 7/1/2017		Sheet 1 of 1
File: C:\Users\..\VCF VCA.SchDoc		Drawn By: L.Walker - SSM

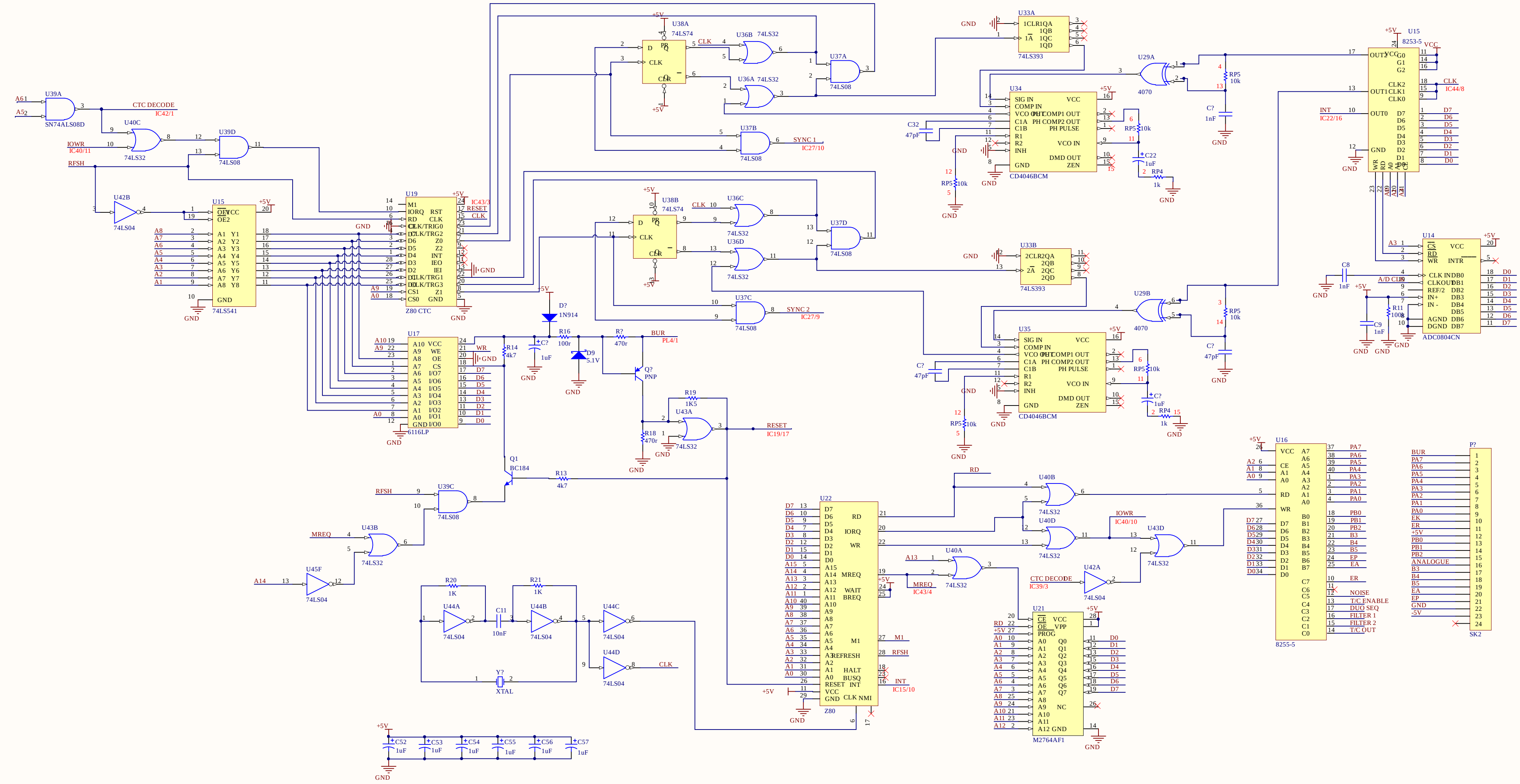

U39A SN74ALS08D
A6
A5
CTC DECODE
IC42/1
U40C 74LS32
IOWR
IC40/11
U39D 74LS08
RFSH
U42B 74LS04
U15 74LS541
A8
A7
A6
A5
A4
A3
A2
A1
GND
U19 Z80 CTC
M1
IORQ
RD
CLK/TRG0
RST
CLK
RESET
IC43/3
GND
A9
A0
U17 6116LP
A10
A9
WR
GND
D7
D6
D5
D4
D3
D2
D1
D0
R14 4k7
C? 1uF
R16 100r
D? 1N914
D9 5.1V
R? 470r
BUR
PL4/1
Q? PNP
R18 470r
R19 1K5
U43A 74LS32
RESET
IC19/17
Q1 BC184
R13 4k7
U39C 74LS08
MREQ
U43B 74LS32
A14
U45F 74LS04
R20 1K
R21 1K
U44A 74LS04
C11 10nF
U44B 74LS04
U44C 74LS04
U44D 74LS04
CLK
Y? XTAL
C52 1uF
C53 1uF
C54 1uF
C55 1uF
C56 1uF
C57 1uF
+5V
GND
U38A 74LS74
U36B 74LS32
U36A 74LS32
U37A 74LS08
U37B 74LS08
SYNC 1
IC27/10
U38B 74LS74
U36C 74LS32
U36D 74LS32
U37D 74LS08
U37C 74LS08
SYNC 2
IC27/9
U33A 74LS393
U34 CD4046BCM
C32 47pF
RP5 10k
C22 1uF
RP4 1k
U29A 4070
C? 1nF
U33B 74LS393
U35 CD4046BCM
C? 47pF
U29B 4070
U15 8253-5
CLK
IC44/8
INT
IC22/16
U14 ADC0804CN
A3
C8 1nF
A/D CLK
R11 100k
C9 1nF
U22 Z80
M1
RFSH
INT
IC15/10
U40B 74LS32
U40D 74LS32
IOWR
IC40/10
U43D 74LS32
U40A 74LS32
A13
MREQ
IC43/4
U42A 74LS04
CTC DECODE
IC39/3
U21 M2764AF1
U16 8255-5
PA7
PA6
PA5
PA4
PA3
PA2
PA1
PA0
PB0
PB1
PB2
B3
B4
B5
EP
EA
ER
NOISE
T/C ENABLE
DUO SEQ
FILTER 1
FILTER 2
T/C OUT
P? SK2
BUR
EK
ER
+5V
PB0
PB1
PB2
ANALOGUE
B3
B4
B5
EA
EP
GND
-5V

Title

OSCAR - OSC & TRIG

Size	Number	Revision
A2	2	

Date: 7/21/2017
File: C:\Users\..\Trig.SchDoc
Sheet 2 of 2
Drawn By: L.Walker - SSM

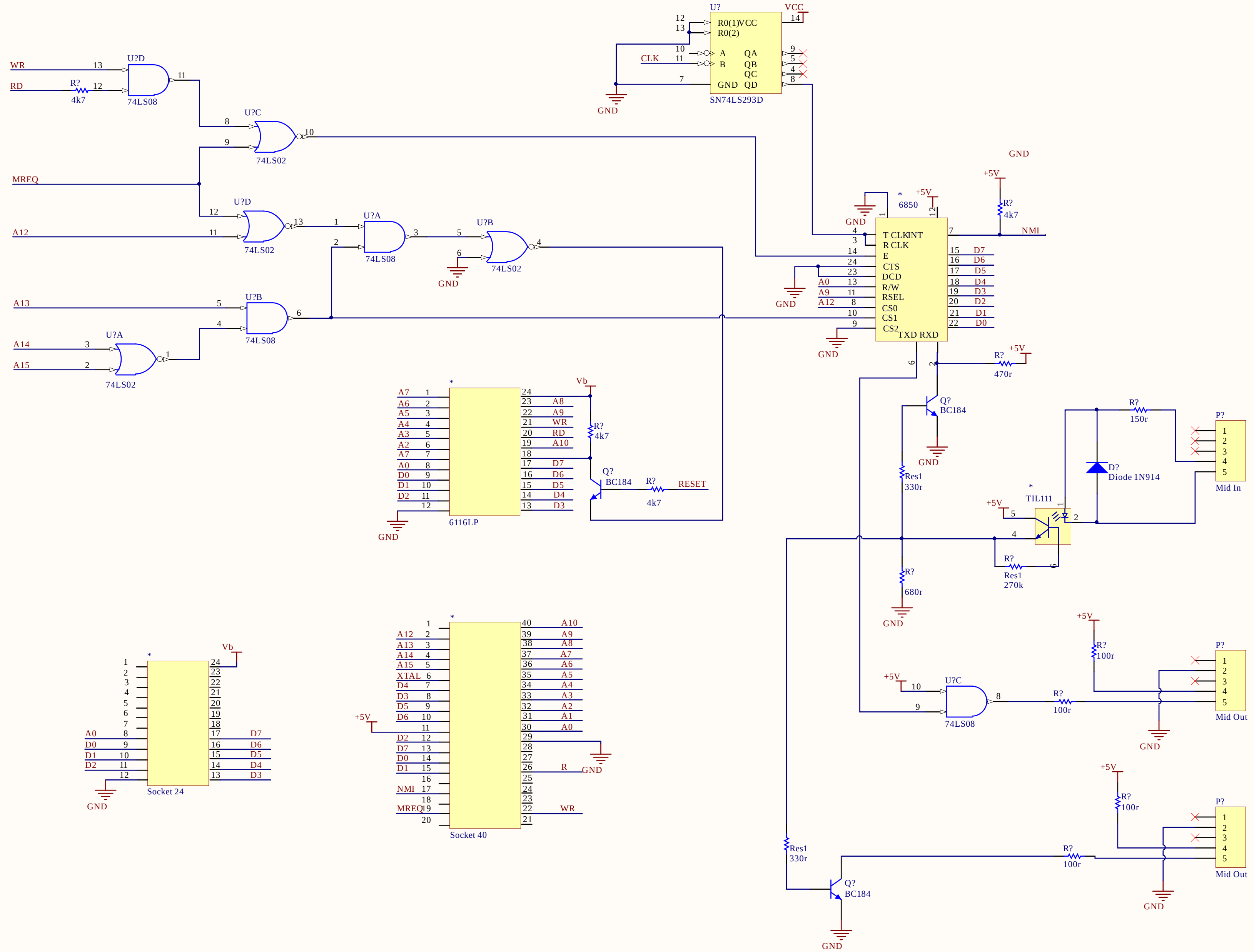
WR
RD
R?
4k7
U?D
74LS08
U?C
74LS02
MREQ
A12
U?A
U?B
A13
A14
A15
U?
R0(1)
R0(2)
VCC
A
B
QA
QB
QC
GND
QD
CLK
SN74LS293D
GND
6850
+5V
T CLK
R CLK
E
CTS
DCD
R/W
RSEL
CS0
CS1
CS2
INT
TXD
RXD
NMI
A0
A9
D7
D6
D5
D4
D3
D2
D1
D0
R?
470r
Q?
BC184
Res1
330r
680r
270k
150r
D?
Diode 1N914
TIL111
P?
Mid In
Mid Out
100r
U?C
74LS08
6116LP
Vb
A8
A10
RESET
Socket 24
Socket 40
XTAL
R

OSCAR - MIDI BOARD

Title		
Size A3	Number 1	Revision
Date: 7/1/2017		Sheet 1of 1
File: C:\Users\..\Oscar midi.SchDoc		Drawn By: L.Walker - SSM